Process Capable

RoHS Compliant 2002/95/EC

REV.	ECN. NO.	APPD.

DIMENSIONS

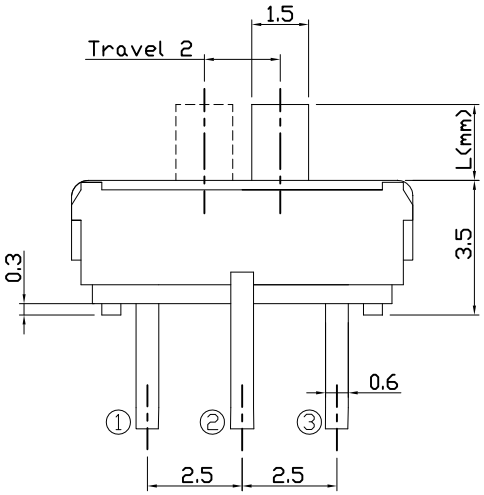

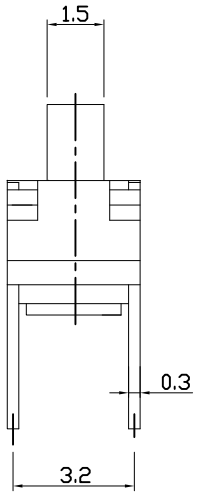

CIRCUIT DIAGRAM

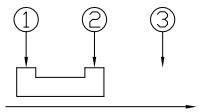

PRODUCT IMAGE

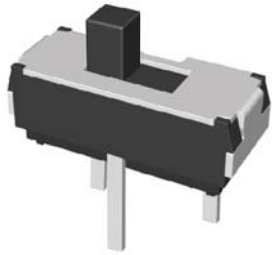

MODEL CODE

AS-1235□-B

L	(mm)
-	2.0
A	4.0
B	3.0

Knob Color	
B	Black
W	White

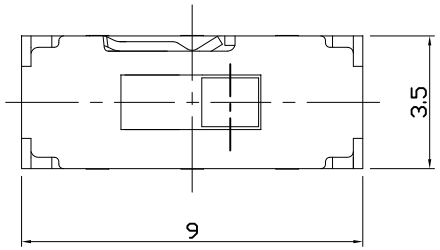

P.C.B MOUNTING PATTERN DIMENSION

The following soldering patterns are recommended for reflow soldering

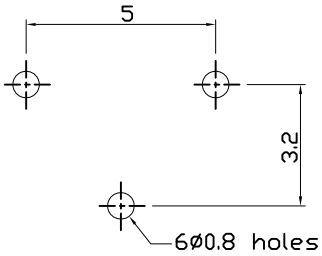

ELECTRO-MECHANICAL CHARACTERISTICS

Refer to additional specifications

Rating	DC 6V 0.3A
Circuit	1C-2P
Contact Resistance	70mΩ Max.
Travel	2.0 ± 0.3mm
Operating Force	200±100gf
Operating Life(cycles)	10,000

.X ±0.2	X. ±2°	UNITS mm	龙创中业电子（深圳）有限公司
		MAT'L SEE NOTE	TITLE: MINI SLIDE SWITCH / PART NO.: AS-1235 SERIES
		FINISH SEE NOTE	DR: Ricky 2014/04/03 / DWG NO.: ASI-1235
		Q'TY	CHKD: Ricky 2014/04/03
			APPD:

SCALE 1:1 | SHEET 1/1 | REV. A | CUSTOMER DRAWING

THESE DRAWINGS AND SPECIFICATIONS ARE THE PROPERTY OF ACCURATE INNOTECH INC AND SHALL NOT BE REPRODUCED, COPIED OR USED IN ANY MANNER WITHOUT THE PRIOR WRITTEN CONSENT OF ACCURATE INNOTECH INC.