Pb Process Capable

RoHS Compliant 2002/95/EC

REV.	ECN. NO.	APPD.

DIMENSIONS

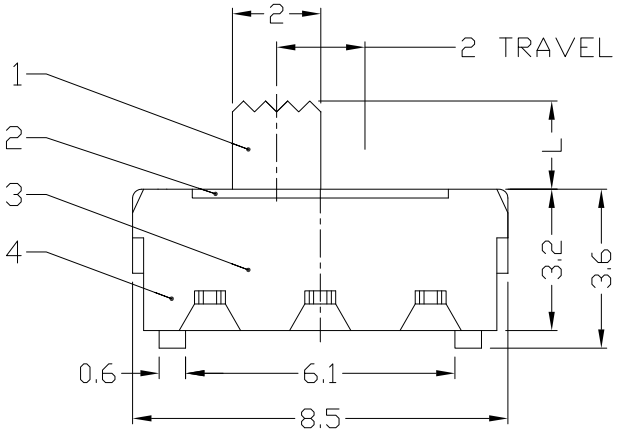

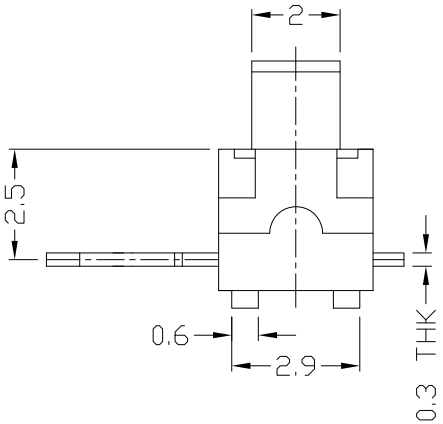

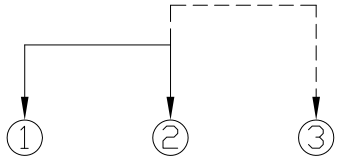

CIRCUIT DIAGRAM

MODEL CODE

AS-1260 □ - B

L	(mm)
–	2.0
A	2.5
B	3.0
C	4.0
D	4.5

Knob Color	
B	Black

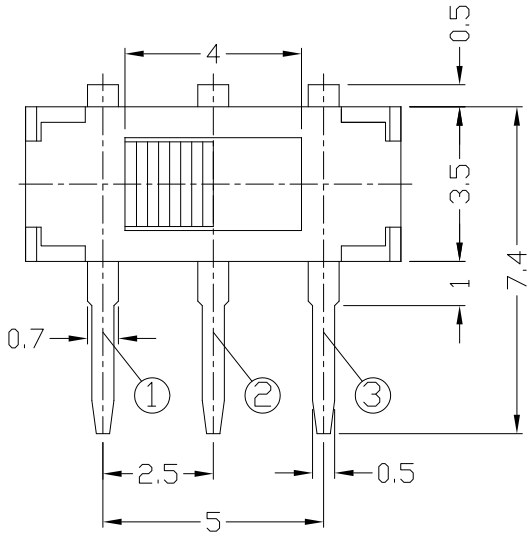

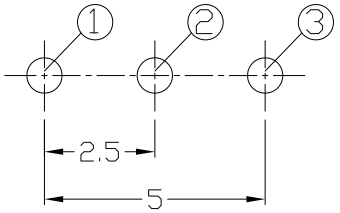

P.C.B LAYOUT

BOTTOM VIEW

ELECTRO-MECHANICAL CHARACTERISTICS

Refer to additional specifications

RATING	DC6V 0.3A
CIRCUIT	1P2T
CONTACT RESISTANCE	70mΩ MAX.
TRAVEL	2mm
OPERATING FORCE	150±50gf
OPERATING LIFE(cycles)	10,000

NO.	PARTS	MATERIAL	Q'TY	FINISHING
8				
7				
6				
5				
4	CASE	PA66/BRASS STRIP	1	BLACK/Ag PLATED
3	CONTACT	BRASS WIRE	1	Au PLATED
2	COVER	SUS	1	NATURAL
1	KNOB	PA66	1	BLACK

WITHIN 1.5mm:±0.1mm

OVER 1.5mm:±0.2mm

THESE DRAWINGS AND SPECIFICATIONS ARE THE PROPERTY OF ACCURATE INNOTECH INC AND SHALL NOT BE REPRODUCED, COPIED OR USED IN ANY MANNER WITHOUT THE PRIOR WRITTEN CONSENT OF ACCURATE INNOTECH INC.

UNITS mm

MAT'L SEE NOTE

FINISH SEE NOTE

Q'TY

龙创中业电子（深圳）有限公司

TITLE: MINI SLIDE SWITCH / HORIZONTAL

PART NO.: AS-1260 SERIES

DR: Ricky 2015/04/09

DWG NO.: ADL-1260

CHKD: Ricky 2015/04/09

APPD:

SCALE	SHEET	REV.	
5:1	1/1	A	CUSTOMER DRAWING