REV.	ECN. NO.	APPD.

Pb Process Capable

RoHS Compliant 2002/95/EC

DIMENSIONS

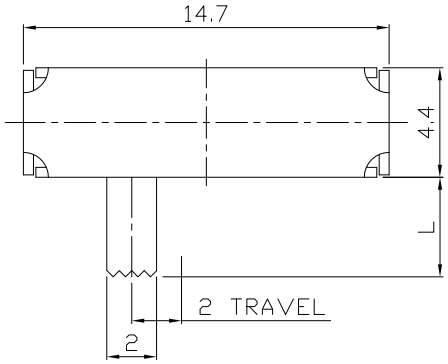

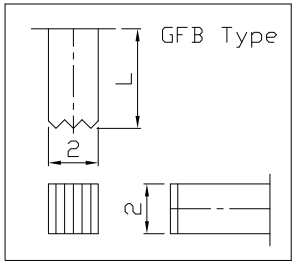

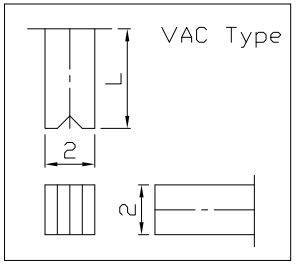

MODEL CODE

SK-14D02-GEE

Knob Type
GEE
GFB
VAC

L(mm)
~

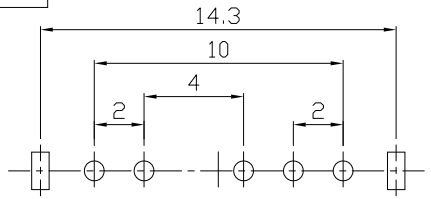

P.C.B LAYOUT
BOTTOM VIEW

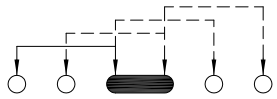

CIRCUIT DIAGRAM

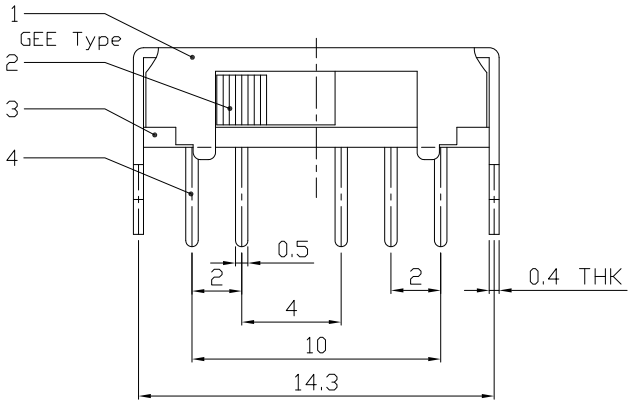

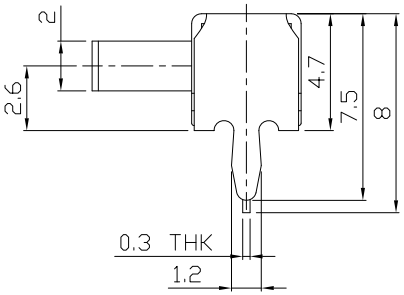

ELECTRO-MECHANICAL CHARACTERISTICS

Refer to additional specifications

RATING	0.3A 50V DC
CIRCUIT	1P4T
CONTACT RESISTANCE	100mΩ MAX.
TIMING	SHORTING
TRAVEL	2mm
OPERATING FORCE	250±100gf
OPERATING LIFE(cycles)	10,000

NO.	PARTS	MATERIAL	Q'TY	FINISHING
8				
7				
6	SPRING PLATE	SUS	1	NATURAL
5	CONTACT CLIP	PBS STRIP	1	Ag PLATED
4	TERMINAL	BRASS STRIP	5	Ag PLATED
3	BASE	PHENOLIC RESIN	1	NATURAL
2	KNOB	POM	1	BLACK
1	FRAME	STEEL STRIP	1	Ni PLATED

WITHIN 1.5mm: ±0.1mm
OVER 1.5mm: ±0.2mm

THESE DRAWINGS AND SPECIFICATIONS ARE THE PROPERTY OF ACCURATE INNOTECH INC AND SHALL NOT BE REPRODUCED, COPIED OR USED IN ANY MANNER WITHOUT THE PRIOR WRITTEN CONSENT OF ACCURATE INNOTECH INC.

UNITS mm
MAT'L SEE NOTE
FINISH SEE NOTE
Q'TY

龙创中业电子（深圳）有限公司

TITLE: SLIDE SWITCH / HORIZONTAL
PART NO.: SK-14D02
DR: Ricky 2016/06/23
DWG NO.: ADL-14D02
CHKD: Ricky 2016/06/23
APPD:

SCALE	SHEET	REV.	CUSTOMER DRAWING
4:1	1/1	A	