REV.	ECN. NO.	APPD.

Pb Process Capable

RoHS Compliant 2002/95/EC

DIMENSIONS

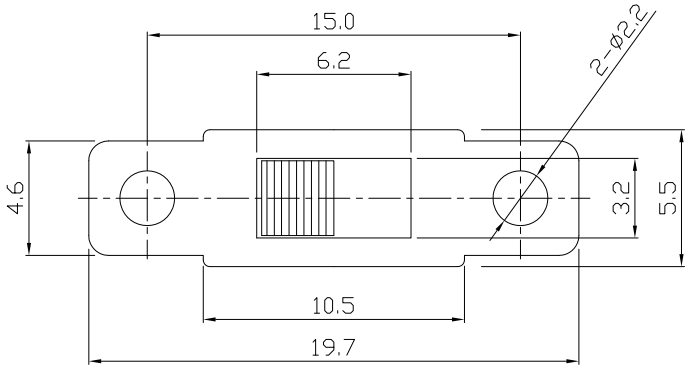

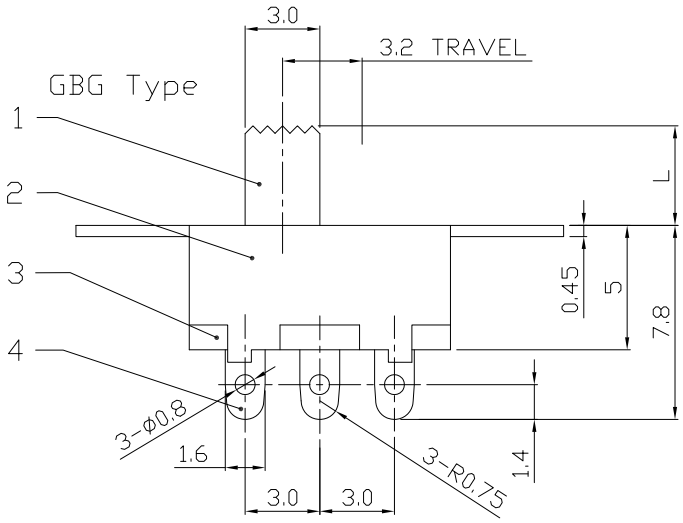

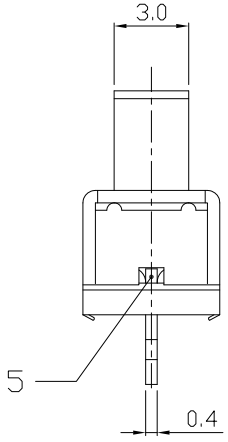

MODEL CODE

SS-12F15-GBG

Knob Type	L(mm)
GBG	~

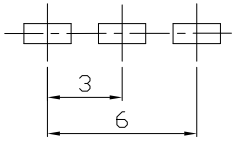

P.C.B LAYOUT
BOTTOM VIEW

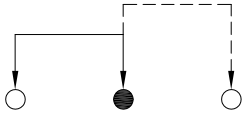

CIRCUIT DIAGRAM

ELECTRO-MECHANICAL CHARACTERISTICS

Refer to additional specifications

RATING	0.5A 50V DC
CIRCUIT	1P2T
CONTACT RESISTANCE	30mΩ MAX.
TIMING	NON-SHORTING
TRAVEL	3.2mm
OPERATING FORCE	200±100gf
OPERATING LIFE(cycles)	10,000

NO.	PARTS	MATERIAL	Q'TY	FINISHING
8				
7				
6	SPRING	SUS WIRE	1	NATURAL
5	CONTACT PLATE	BRADD STRIP	1	Ag PLATED
4	TERMINAL	BRASS	3	Ag PLATED
3	TERMINAL BASE	PHENOLIC RESIN	1	NATURAL
2	FRAME	STEEL STRIP	1	BLACK
1	KNOB	POM	1	BLACK

WITHIN 1.5mm: ±0.1mm
OVER 1.5mm: ±0.2mm

THESE DRAWINGS AND SPECIFICATIONS ARE THE PROPERTY OF ACCURATE INNOTECH INC AND SHALL NOT BE REPRODUCED, COPIED OR USED IN ANY MANNER WITHOUT THE PRIOR WRITTEN CONSENT OF ACCURATE INNOTECH INC.

UNITS mm
MAT'L SEE NOTE
FINISH SEE NOTE
Q'TY

龙创中业电子（深圳）有限公司

TITLE: SLIDE SWITCH / VERTICAL
PART NO.: SS-12F15
DR: Ricky 2016/08/05
DWG NO.: AZJ-12F15
CHKD: Ricky 2016/08/05
APPD:

SCALE	SHEET	REV.	
3:1	1/1	A	CUSTOMER DRAWING