Process Capable

RoHS Compliant 2002/95/EC

REV.	ECN. NO.	APPD.

DIMENSIONS

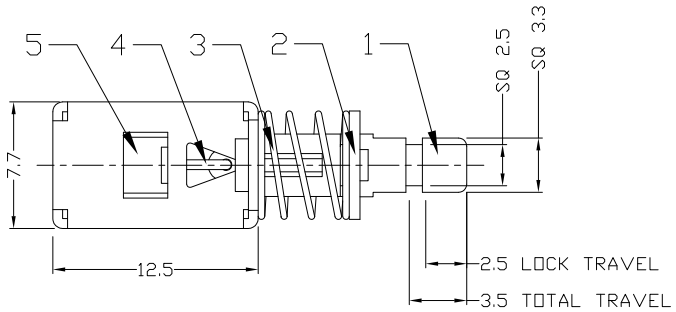

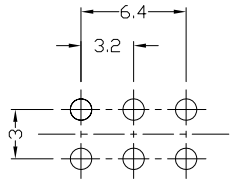

P.C.B LAYOUT

BOTTOM VIEW

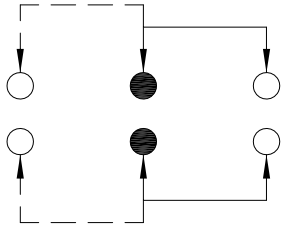

CIRCUIT DIAGRAM

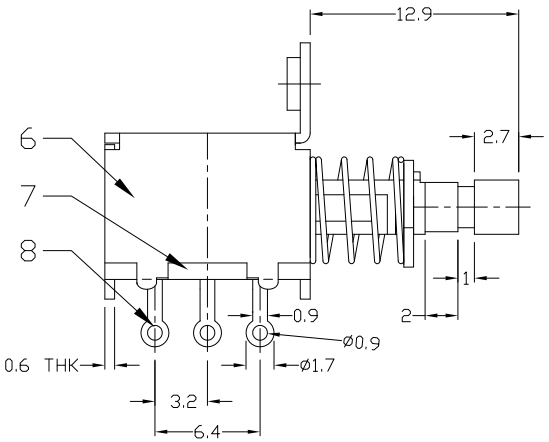

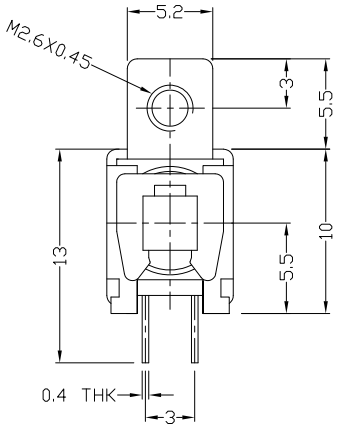

ELECTRO-MECHANICAL CHARACTERISTICS

Refer to additional specifications

RATING	DC50V 0.3A	
CIRCUIT	2P2T	
CONTACT RESISTANCE	100mΩ MAX.	
TIMING	NON-SHORTING	
OPERATING MODE	SELF-LOCK	
STROKE	TOTAL 3.5mm	LOCK 2.5mm
OPERATING FORCE	250±100gf	
OPERATING LIFE(cycles)	10,000	

NO.	PARTS	MATERIAL	Q'TY	FINISHING
9	CONTACT CLIP	PBS STRIP	2	Ag PLATED
8	TERMINAL	BRASS STRIP	6	Ag PLATED
7	BASE	PHENOLIC RESIN	1	NATURAL
6	FRAME	STEEL STRIP	1	Ni PLATED
5	SPRING PLATE	PBS STRIP	1	NATURAL
4	CAM STICK	PBS WIRE	1	NATURAL
3	SPRING	STEEL WIRE	1	Ni PLATED
2	BLOCK	STEEL STRIP	1	Ni PLATED
1	KNOB	PA66	1	BLACK

WITHIN 1.5mm:±0.1mm

OVER 1.5mm:±0.2mm

THESE DRAWINGS AND SPECIFICATIONS ARE THE PROPERTY OF ACCURATE INNOTECH INC AND SHALL NOT BE REPRODUCED, COPIED OR USED IN ANY MANNER WITHOUT THE PRIOR WRITTEN CONSENT OF ACCURATE INNOTECH INC.

UNITS mm

MAT'L SEE NOTE

FINISH SEE NOTE

Q'TY

DONGGUAN MINGJU ELECTRONICS CO.,LTD

TITLE: PUSH SWITCH / HORIZONTAL

PART NO.: PS-22F56L

DR: Ricky 2016/12/24

CHKD: Ricky 2016/12/24

APPD:

DWG NO.: PS-22F56L

SCALE	SHEET	REV.	CUSTOMER DRAWING
2:1	1/1	A	